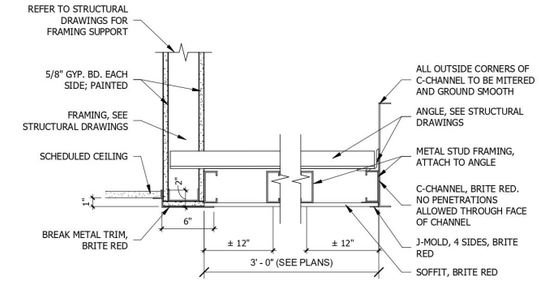

10 CANOPY DETAIL

SCALE: 1 1/2" = 1'-0"

CEILING AREAS OF 144 SQ. FT. OR LESS SURROUNDED BY WALLS WHICH CONNECT DIRECTLY TO THE STRUCTURE ABOVE SHALL NOT REQUIRE THE DIAGONAL BRACING WIRES.

EACH VERTICAL WIRE SHALL BE ATTACHED EACH END WITH MIN. 3 TURNS.

CEILING GRID SHALL BE INSTALLED LEVEL TO WITHIN 1/8" IN 12'. ALL WIRE LOOPS SHALL BE TIGHTLY WRAPPED AND SHARPLY BENT.

FOR CEILING AREAS EXCEEDING 1,000 S.F. HORIZONTAL RESTRAINT OF THE CEILING TO THE STRUCTURE SHALL BE PROVIDED.

CABLE TRAYS AND ELECTRICAL CONDUITS SHALL BE SUPPORTED AND BRACED INDEPENDENTLY OF THE CEILING.

SUSPENDED CEILING SHALL BE SUBJECT TO THE SPECIAL INSPECTION REQUIREMENTS OF SECTION 1704.

CEILING AREAS OF 1000 SQ. FT. OR LESS SURROUNDED BY WALLS WHICH CONNECT DIRECTLY TO THE STRUCTURE ABOVE SHALL NOT REQUIRE THE DIAGONAL BRACING WIRES.

LOCAL KINKS OR BENDS SHALL NOT BE MADE IN HANGER WIRES AS A MEANS OF LEVELING MAIN RUNNERS.

A HEAVY DUTY T-BAR SYSTEM SHALL BE USED.

THE WIDTH OF THE PERIMETER SUPPORTING CLOSURE ANGLE SHALL NOT BE LESS THAN 2 INCHES.

IN EACH ORTHOGONAL HORIZONTAL DIRECTION, ONE END OF THE CEILING GRID SHALL BE ATTACHED TO THE CLOSURE ANGLE. THE OTHER END IN EACH HORIZONTAL DIRECTION SHALL HAVE A 0.75 INCH CLEARANCE FROM THE WALL AND SHALL REST UPON AND BE FREE TO SLIDE ON THE CLOSURE ANGLE.

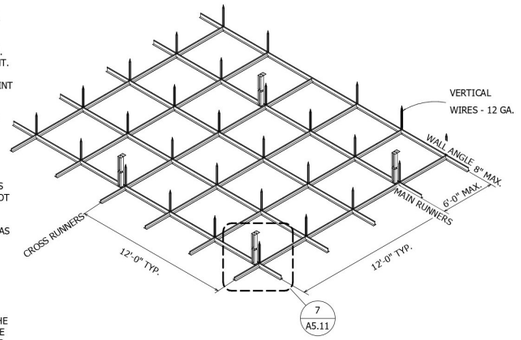

9 SUSPENDED CEILING BRACING

SCALE: 1/8" = 1'-0"

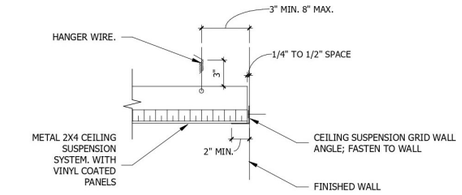

8 ACOUST. TILE/WALL

SCALE: 1 1/2" = 1'-0"

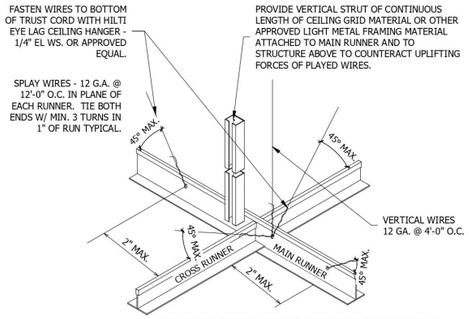

ALL CEILING MOUNTED LIGHT FIXTURES SHALL BE ATTACHED TO SUSPENDED CEILING GRID, IN ADDITION 12 GA. HANGER WIRES SHALL BE ATTACHED TO THE GRID WITHIN 3" OF EACH CORNER OF THE FIXTURE.
TWO ADDITIONAL WIRES SHALL BE CONNECTED TO THE LIGHT HOUSING AND TO THE STRUCTURE ABOVE (THESE WIRES MAY BE SLACK).

WIRES SHALL NOT ATTACH TO OR BEND AROUND INTERFERING MATERIAL OR EQUIPMENT, NOR SHALL THEY BE CLOSER THAN 5" FROM ANY UN-BRACED HORIZONTAL PIPING OR DUCTWORK. A TRAPEZE OR SIMILAR DEVICE SHALL BE USED WHERE OBSTRUCTIONS OCCUR.

7 SEISMIC BRACING

SCALE: 3/8" = 1'-0"

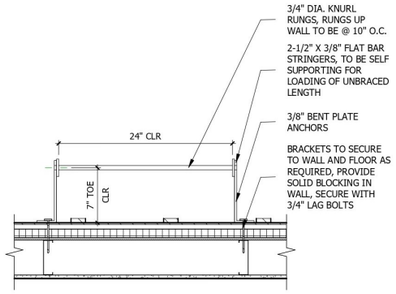

6 ROOF ACCESS LADDER

SCALE: 1" = 1'-0"

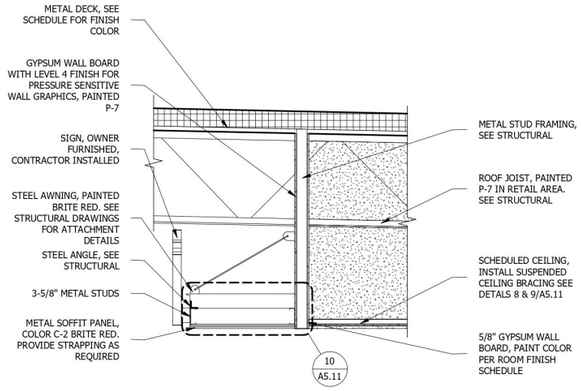

5 BONFIRE CANOPY

SCALE: 1/2" = 1'-0"

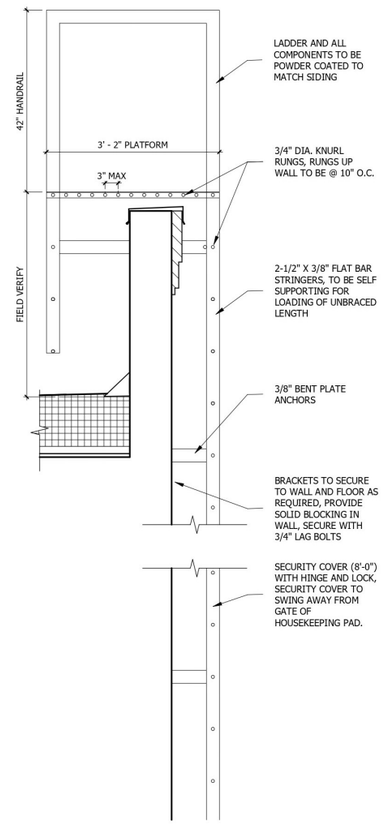

1 ROOF ACCESS LADDER / SAFETY CAGE

SCALE: 3/4" = 1'-0"

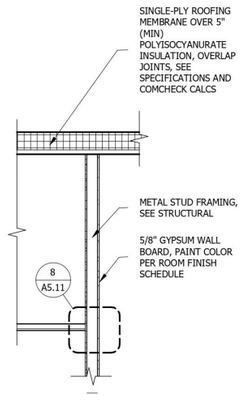

4 CEILING DETAIL

SCALE: 1/2" = 1'-0"

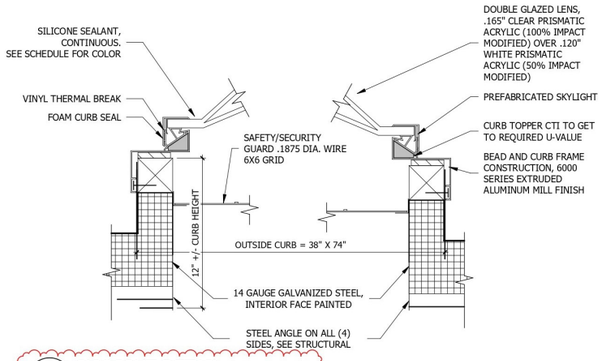

3 SKYLIGHT DETAIL

SCALE: 1 1/2" = 1'-0"

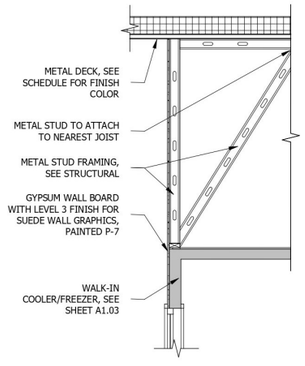

2 COOLER WALL SECTION

SCALE: 1/2" = 1'-0"

Project Name

Client Name

ROOF DETAILS

Project Number	
Issue Date	
Author	
Checker	

A 203